1-800-383-7323 USA/CAN
www.energizer.com

ENERGIZER CR2032

Lithium Coin

Industry Standard Dimensions

mm (inches)

This Battery has Underwriters Laboratories component Recognition

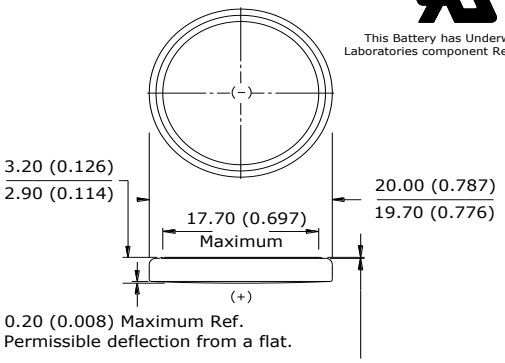

Specifications

Classification:	"Lithium Coin"
Chemical System:	Lithium / Manganese Dioxide (Li/MnO_2)
Designation:	ANSI / NEDA-5004LC, IEC-CR2032
Nominal Voltage:	3.0 Volts
Typical Capacity:	240 mAh (to 2.0 volts) (Rated at 15K ohms at 21°C)
Typical Weight:	3.0 grams (0.10 oz.)
Typical Volume:	1.0 cubic centimeters (0.06 cubic inch)
Typical IR:	10,000 - 40,000 mΩ
Max Rev Charge:	1 microampere
Energy Density:	198 milliwatt hr/g, 653 milliwatt hr/cc
Typical Li Content:	0.109 grams (0.0038 oz.)
UL Recognized:	MH29980
Operating Temp:	-30C to 60C
Self Discharge:	~1% / year

Safety: **⚠ WARNING**

(1) KEEP OUT OF REACH OF CHILDREN. Swallowing may lead to serious injury or death in as little as 2 hours due to chemical burns and potential perforation of the esophagus. **Immediately see doctor; have doctor phone (202) 625-3333.**

(2) Battery compartment design. To prevent children from removing batteries, battery compartments should be designed with one of the following methods: a) a tool such as screwdriver or coin is required to open battery compartment or b) the battery compartment door/cover requires the application of a minimum of two independent and simultaneous movements of the securing mechanism to open by hand. Screws should remain captive with the battery door or cover.

Continuous Discharge Characteristics

Load: 15K ohms - continuous 21°C (70°F)
Typical Drain @ 2.9V: 0.19 mA

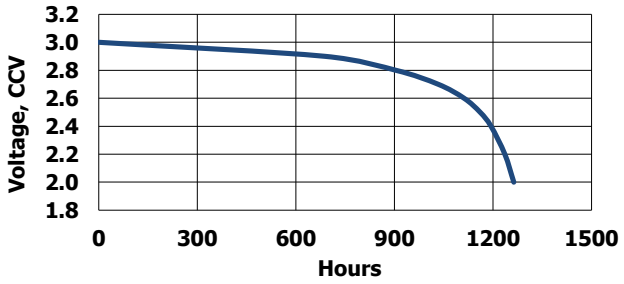

Cross Section

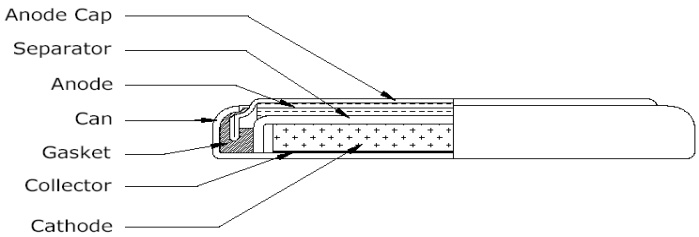

Simulated Application test

Typical Performance at 21°C (70°F)

Schedule:	Typical Drains: at 2.9V (mA)	Load (ohms)	Cutoff 2.0V (hours)
Continuous	0.19	15,000	1263

Important Notice

This datasheet contains typical information specific to products manufactured at the time of its publication.

©Energizer Holdings, Inc. - Contents herein do not constitute a warranty.

1-800-383-7323 USA/CAN
www.energizer.com

ENERGIZER CR2032

Lithium Coin

Pulse Characteristics

Load: 100 ohms - 21°C (70°F)
Pulse Duration: 2 seconds

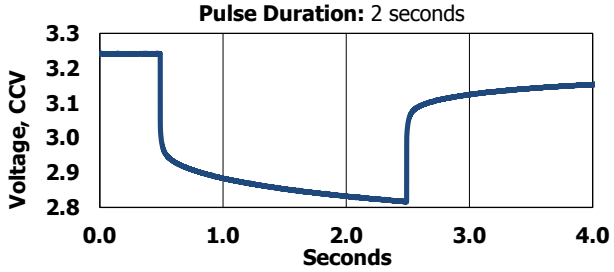

Pulse Discharge Characteristics

Bkgnd Drain: Continuous
21°C (70°F) 15K ohms
0.19 mA @2.9V

Pulse Drain: 2 seconds X 12 times/day
400 ohms
~6.8 mA @2.7V

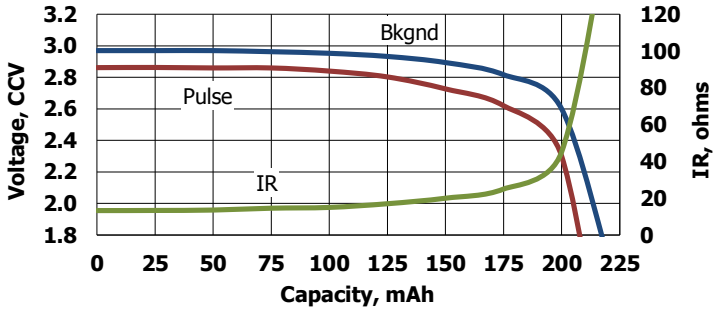

Bkgnd Drain: None
21°C (70°F)

Pulse Drain: 1mSec ON / 14mSec OFF
120 ohms
~23 mA @2.7V

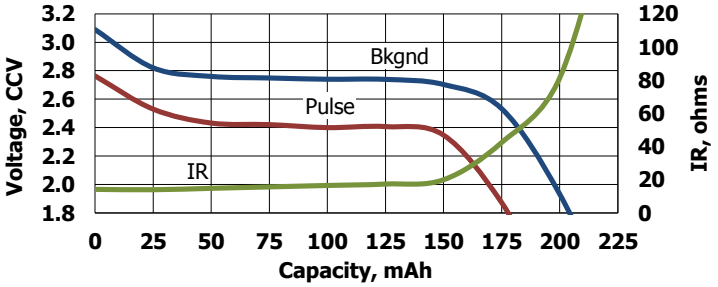

Important Notice
This datasheet contains typical information specific to products manufactured at the time of its publication.
©Energizer Holdings, Inc. - Contents herein do not constitute a warranty.